DELMONT
POOL EQUIPMENT

MARINA POOL

WP SERIES
SUPERPOWER POOL PUMP

Delmont WP pump is built to be efficient, durable and reliable. The pump body is made of high strength Glass Fiber Reinforced Polypropylene (GFRPP) to withstand heat and resist corrosion. The pump includes a pre-filter with a large strainer to prevent the entry of any foreign objects which could cause damage to the hydraulic parts of the pump, with a see-through lid for easy inspection. The hydraulic design moves water more efficiently and quieter than any other pump in its category. Mechanical seal is Silicon carbide/Graphite (seawater resistant). The shaft is Stainless Steel 316L. The motor is using Copper coil and Aluminum alloy housing.



- Designed for high performance and long wearing application with anti-rust
- Less power use, high head, high flow
- Easy to maintain, clean and use
- Large basket strainer and see-through lid

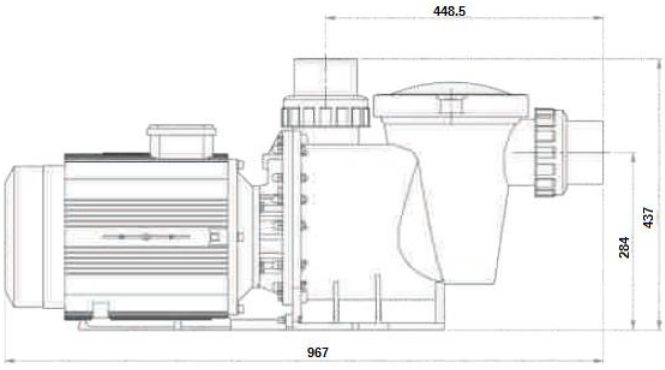

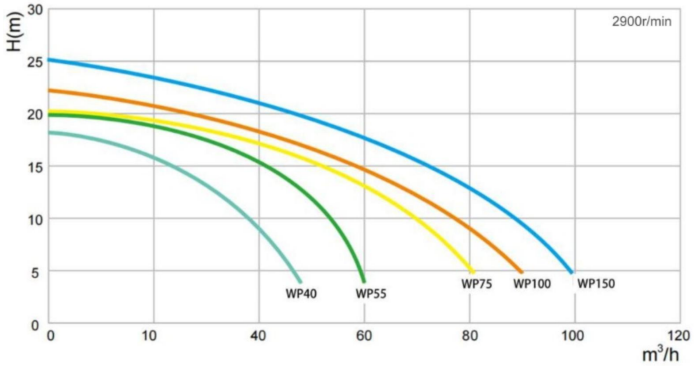

CODE	DESCRIPTION	PORT	MAX FLOW RATE (m^3/h)	HEAD (m)	FLOW RATE (m^3/h)	8H VOL (m^3/h)
DPM00047	4 HP Three Phase	3”	48	10	38	304
DPM00048	5.5 HP Three Phase	3”	60	10	56	448
DPM00049	7.5 HP Three Phase	3”	80	10	70	560
DPM00050	10 HP Three Phase	3”	95	10	78	624
DPM00051	15 HP Three Phase	3”	110	10	90	720